coats®

9028E Tire Changer

For servicing single piece automotive and most tubeless light truck tire/wheel assemblies.

Any other type, including tube type and agricultrual, require special handling.
Tires identified as truck tires need to adhere to OSHA standard 1910.177.



Parts Identification

READ these instructions before placing unit in service. KEEP these and other materials delivered with the unit in a binder near the machine for ease of reference by supervisors and operators.

HENNESSY INDUSTRIES

1601 J. P. Hennessy Drive, La Vergne, TN USA 37086 615/641-7533 800/688-6359 www.coatsgarage.com
HENNESSY INDUSTRIES LLC Manufacturer of COATS®, AMMCO® and BADA® Automotive Service Equipment and Tools.

Manual Part No.: 85611588 00
Revision: 07/19

Parts Identification

The following pages include parts breakdowns with exploded view illustrations to help with ordering replacement or spare kits. Assemblies are noted where it is recommended that individual parts not be ordered separately. Note that the parts view illustrations are for multiple models and not all parts shown are on all models. Every effort is made to supply accurate exploded views, however, due to interim changes in manufacturing operations, some units may not be exactly as illustrated.

Table of Contents

CHASSIS.....3

TOWER ASSY.....4-5

FOOT PEDAL ASSEMBLY.....6-7

BEAD LOOSENER.....8

MOUNT / DEMOUNT TOOL.....9

TABLETOP.....10-11

MOTOR & TRANSMISSION.....12

INFLATION PEDAL ASSY.....13

INFLATION GROUP.....14-15

LEFT HELPER.....16-17

RIGHT HELPER.....18-19

PNEUMATIC DIAGRAM.....20

CYLINDER, BEAD LOOSENER.....21

ACCESSORIES.....22

CHASSIS

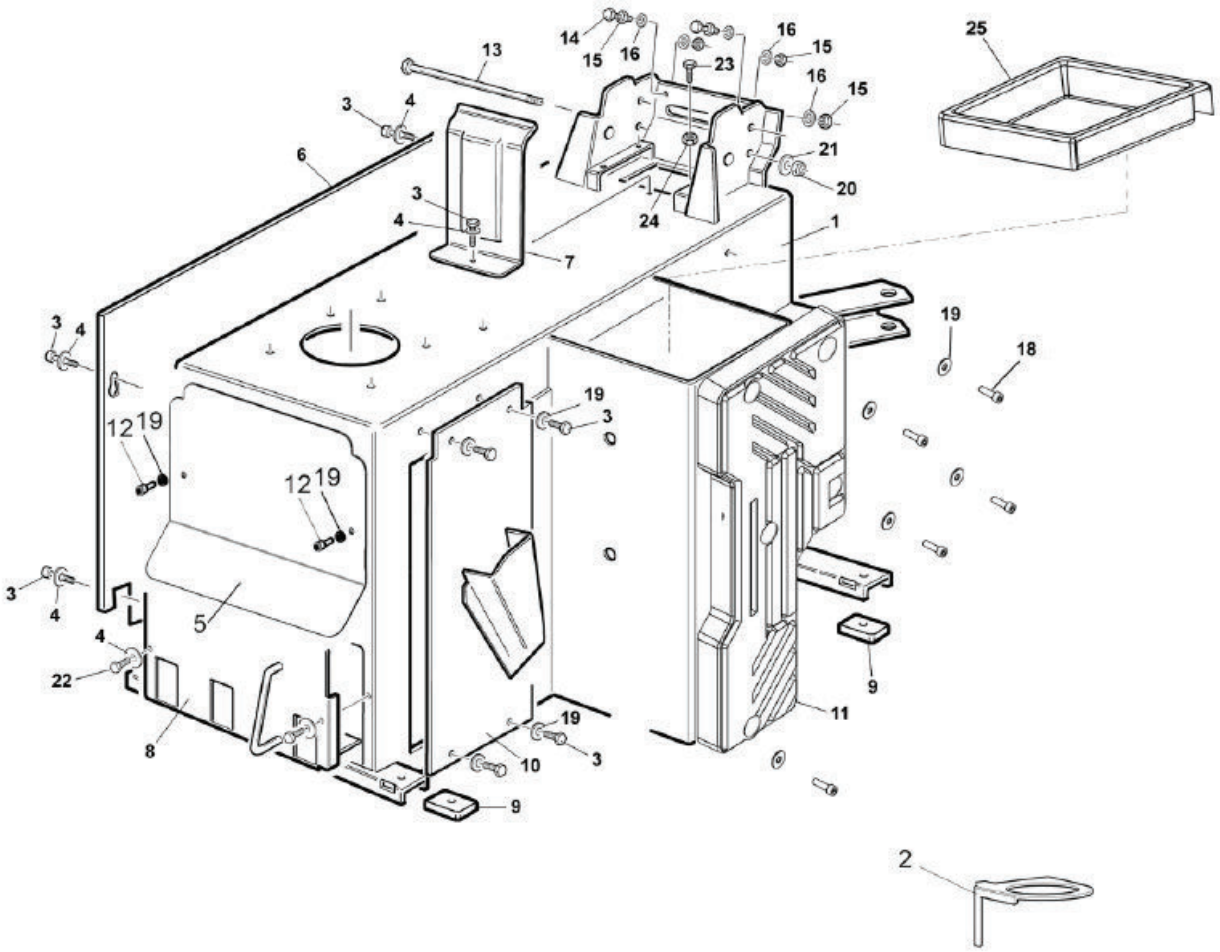

Item No	Part No.	Description
1	87936175	Machine Frame
2	86638302	Grease Bucket Support
3	84393749	Knurled Screw Tcei M 6x20 Znt
4	84399998	Washer 6 (6,4x12x1,6)
5	86644899	Protective Cover
6	87936296	Cover
7	83012450n	V. Arm Front Protection
8	86636848	Pedal Unit Metal Sheet
9	83002099	Plastic Foot
10	87936403	Bead Breaker Side Panel With Bead Lever Support
11	83032880	Wheel Support
12	84398723	Screw 6x12
13	84395109	Screw Te 12x190 8.8 Pf Znt
14	84398030	Screw 10x50
15	84399967	Nut m10
16	84398662	Grower Washer d.10
18	84399890	Screw 6x20
19	84398848	Washer 6 (6,6x18x1,5)
20	84399865	Self-Locking Nut m12
21	84398637	Washer d.12x21x2,5 uni1750
22	84398723	Screw 6x12
23	84395633	Screw te 12x35 8.8
24	84398657	Nut m12
25	83038034	ABS Cover - Black

TOWER ASSY

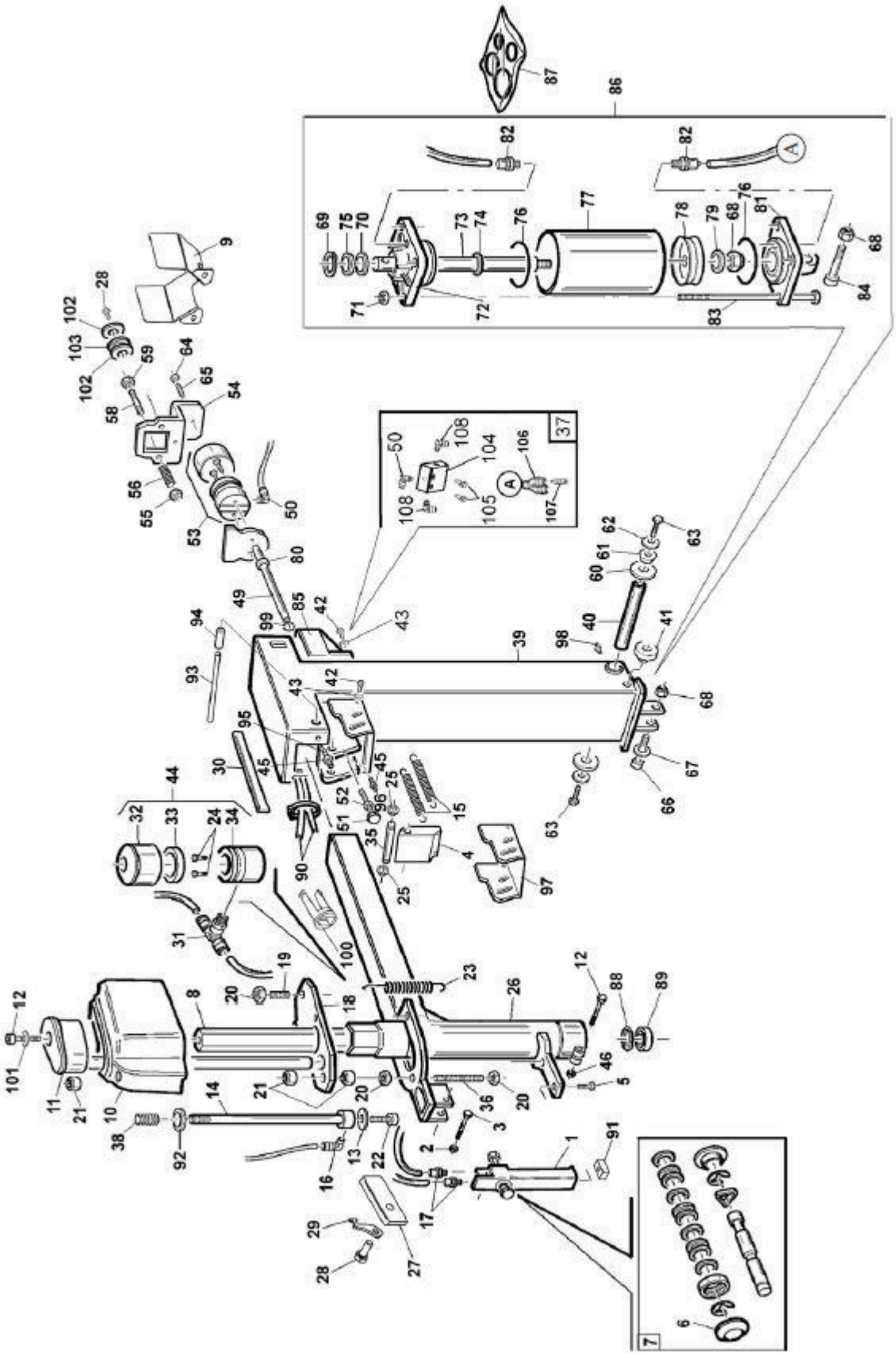

TOWER ASSY

Item No	Part No.	Description	Item No	Part No.	Description
1	82012461	Operating Arm Control	56	84294966	Spring 26x25
2	84399895	Self-Locking Nut m4	58	83015677	Special Screw 12x60
3	84399896	Screw 4x35	59	84398805	Nut M12
4	83036335	Locking Plate	60	83015751	Outer Bush
5	84399892	Screw 6x20	61	83015750	Inner Bush
6	83012721	Aluminum Cap	62	83000495	Washer d.10x36x5
7	82008335	Operating Arm, Robot Ctrl Kit	63	84399966	Screw 10x20
8	83008889	Hexagonal Arm d.41 l=856	64	84399967	Nut M10
9	83036411N	Back Cylinder Head Plate	65	84398284	Screw 10x30 5923
10	83012357N	Arm Frame	66	83000599	Pin M12 l=50
11	82037341	Ext. Robot Pipe 20mm	67	84399981	Washer 12 (13x24x2,5)
12	84399133	Screw 8x40	68	84399865	Self-Locking Nut M12
13	84399998	Washer 6 (6,4x12x1,6)	69	83199599	Seeger Ring d.30
14	83037439	Int. Robot Pipe d.14 l=415	70	84398146	Steel Shim 24x30x1
15	83035641	Extension Spring	71	84397678	Flanged Nut m8
16	84197718	Union	72	83015024	Flange
17	84197743	Union	73	83036413	Tilting Cylinder Shaft
18	83006106	Arm Locking Plate	74	84398146	Steel Shim 24x30x1
19	84398284	Screw 10x30 5923	75	83199601	Scraper Ring
20	84399967	Nut m10	76	84298822	O-Ring d.68,26x3,53
21	84399971	Self-Locking Nut m10	77	83008084	Cylinder Liner l=135
22	84398897	Screw 5x20	78	84198856	Piston d.75
23	83002273	Spring	79	84398753	Washer d.12,5x30x3
24	84399135	Screw 6x35	80	83034916	Shock Absorber
25	84399975	Seeger Ring d.20	81	83015023	Flange
26	82038650	Sq Section Arm - Replace	82	84198954	Quick Union 1/8" -8
27	83007935	Shock Absorber	83	83008085	Cylinder Tie Rod m8x160
28	84399827	Screw 8x20	84	84399539	Screw 12x110
29	83038470	Hoses Fastening Plate	85	83036411	Back Cylinder Head Plate
30	83039793	Pipe Guide - serie "p"	86	82036412	Tilting Cylinder Unit
31	84197740	Quick Union 1/8"	87	82004804	Cylinder Seal d.75
32	84299524	Cylinder Liner d.60	88	83017974	Shock Absorb. Ring cover
33	84299522	Sealing Ring	89	83002601	Mounting Tool Shock Abs
34	84299523	Piston d.60	90	83031217	Rilsan Hose 4x2,7 l=2850
35	83036205	Plate Locking Pin	91	83013355	Handle Insert
36	83012459	Threaded Bar M10	92	84293191	Sealing Ring
37	82041497	Horz. Arm Auto Locking Mech	93	84392622	Parallel Pin 8x120
38	83002629	Spring 13,5x28 f 2,3	94	83038370	Roller
39	87938678	Vertical Tower	95	84398509	Screw 8x16
40	83015981	Articulation Pin	96	84392621	Screw 8x20
41	83014633	Arm Spacer	97	83036410N	Front Cover
42	84398723	Screw 6x12	98	84399207	Lubricator M6
43	84399998	Washer 6 (6,4x12x1,6)	99	84399231	Seeger Ring d.18
44	82099665	Locking Cylinder	100	83038518	Hose Guide Support
45	84399976	Nut M8	101	84399122	Toothed Washer
46	84399900	Self-Locking Nut M8	102	84399947	Washer 8 (9x32x4)
49	82138682	Cylinder Support	103	83000181	Washer
50	84197741	Union 1/8"	104	84196136	Valve
51	84399089	Screw 12x40	105	84399897	Screw 4x25
52	84398657	Nut M12	106	84197193	Y-Union d.8
53	82099665	Locking Cylinder	107	84193434	Union Reduct
54	82138684	Locking Plate	108	84197210	Union 1/8"
55	84398805	Nut M12			

FOOT PEDAL ASSEMBLY

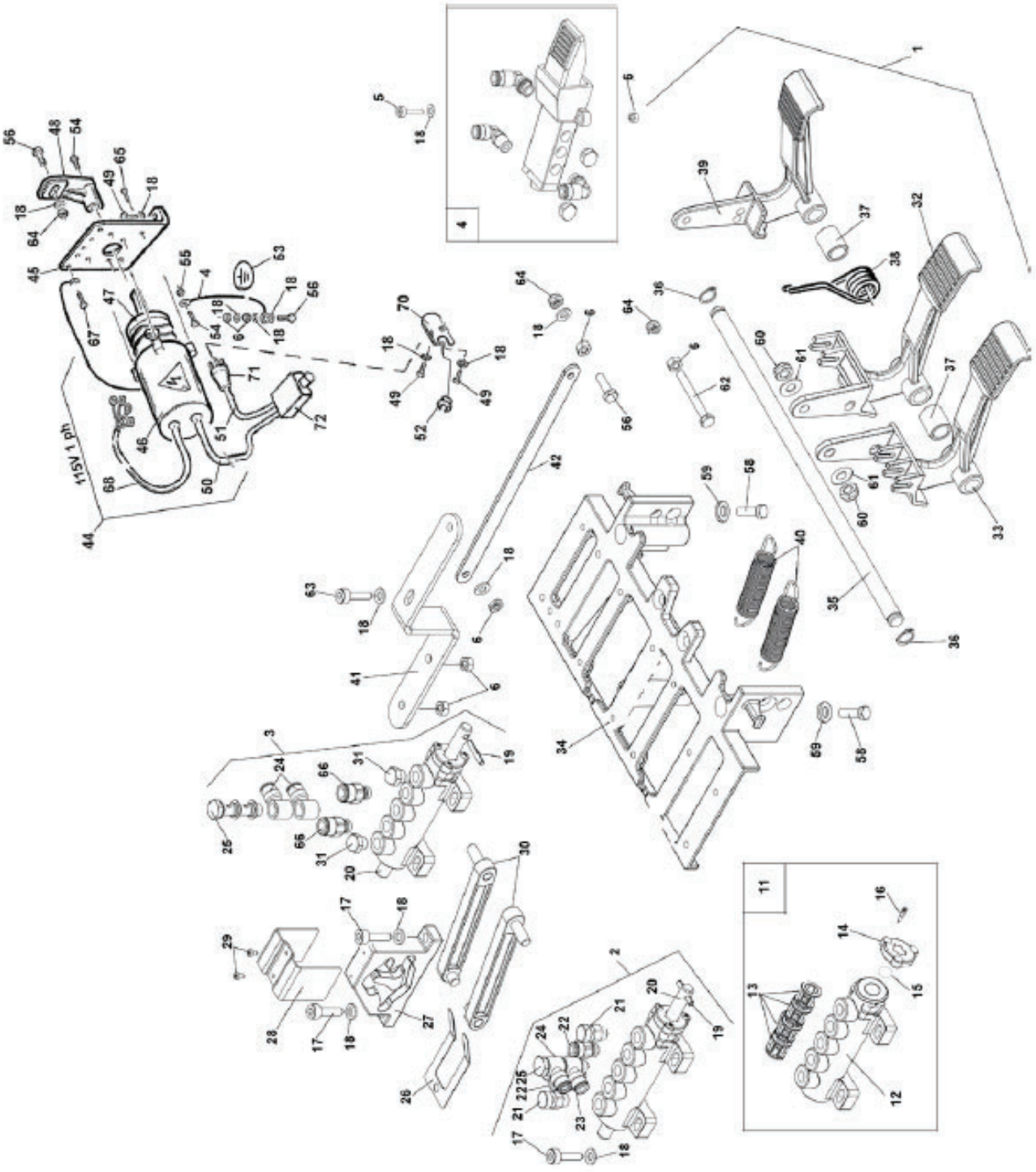

FOOT PEDAL ASSEMBLY

Item No	Part No.	Description
1	82016745	Pedal Unit
2	82002531	Valve
3	82002529	Valve
4	82037050	B/L Pedal Assy
5	84399999	Screw 6x25
6	84399889	Nut M6
11	82002444	Valve Unit Without Pin
12	83001583	Distribution Valve
13	83001584	Spacer
14	83001585	Flange
15	84299000	O-Ring 9,8x3,85
16	84398999	S.Tapping Screw 3,5x13
17	84398274	S.Tapping Screw 5,5x26
18	84399998	Washer 6 (6,4x12x1,6)
19	84398783	Elastic Pin d.4x24
20	83002442	Valve Pin
21	84199843	Silencer Outlet Reg 1/8"
22	84198993	Quick Union 1/8"
23	84199927	Quick Union 1/8" 6-4
24	84197819	Quick Union 1/8" 8-6
25	84199928	Union 1/8"
26	84299911	Leaf Spring
27	84299913	Double Cam
28	84299910	U Bolt
29	84399891	S.Tapping Screw 2,9x6,5
30	84299912	Connecting Rod
31	84193288	Silencer spfl 1/8
32	83002159	Control Pedal
33	83002160	Control Pedal
34	83002161	Pedal Box Base
35	83003095	Pin
36	84399864	Seeger Ring d.12
37	83007953	Bush 18x12,5x20,5
38	83017116	Pedal Control Spring
39	83002157	Control Pedal
40	83018802	Pedal return Spring
41	83015342	Support
42	83015341	Connecting Rod
44	82017241	Rev Unit 1ph 32a-110v
45	83015340	Reverser Support
46	83015345	Reverser Cover
47	84595380	Reverser 32a sontheimer
48	83000175	Reverser Switch Lever
49	84398723	Screw 6x12
50	82015349	Relay-1ph rev conn. Cable
51	82019704	Feeding Cable 110v
52	84595165	Cable Fastener
53	83005604	Decal
54	84399905	Screw 4x12
55	84396106	Nut M4
56	84399892	SCREW 6x20
57	84397734	S.TAPPING SCREW 2,9x12,7
58	84399946	SCREW 8x16
59	84399829	WASHER 8 (8,4x16x1,5)
60	84399900	S.LOCKING NUT M8-
61	84399894	BELLEVILLE WASHER 8,2x18x1
62	84397649	SCREW 6x50 8.8 PF ZNT 5737
63	84398273	SELF-TAPPING SCREW 5,5x19
64	84399893	SELF-LOCKING NUT M6
65	84399044	SCREW 3x12
66	84198954	QUICK UNION 6512 1/8" -8 S.R.
67	84395185	S.THREADING SCREW 3,5x6,5
68	82017242	MOTOR CONNECTING CABLE
70	83016152	SUPPORT SHEET IRON
71	84594208	PLUG 30A NEMA L5-30P 125V
72	84594105	THERMAL PROTECTION

BEAD LOOSENER

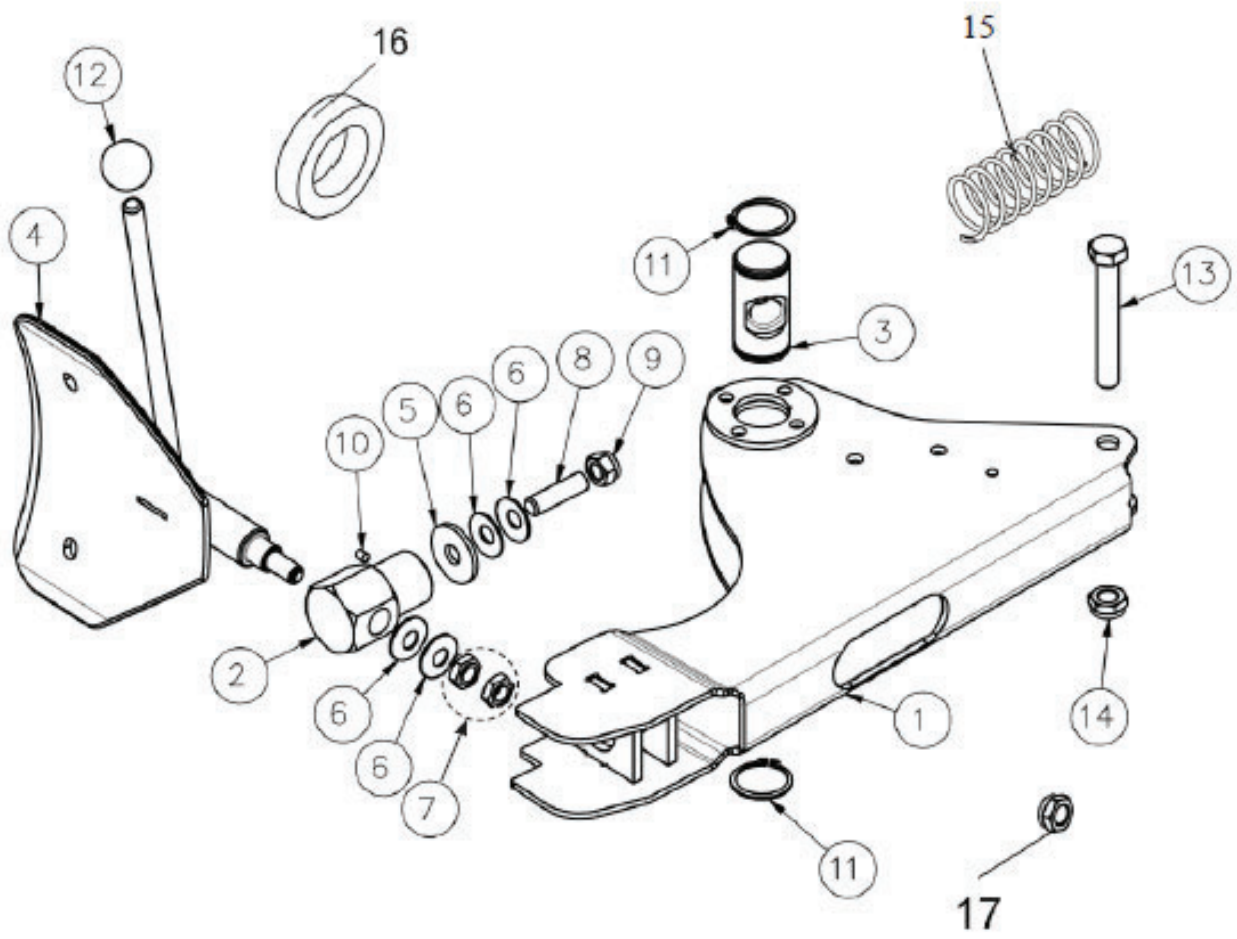

Item No	Part No.	Description
1	86643423	B/l Arm w/o Adjust Selectors
2	83037077	Shovel Pivot Pin
3	83043422	Pivot Pin D.40
4	87035371	B/L Shovel - Complete
5	83037086	B/L Special Washer
6	84398899	Belleville Spring 14,3x34x1,5
7	84393644	Nut Hard Lock m14
8	84395247	Screw 14x50
9	84399949	Self-Locking Nut m14
10	84393205	Screw 6x10
11	84398178	Seeger Ring d.40
12	84299952	Knob d.14
13	83036847	Bead Breaker Cylinder Pin
14	84399963	Self-Locking Nut M16
15	83000114	Spring
16	83035977	Shock-Absorber d.22x75x20
17	84398725	Self-Locking Nut M18

MOUNT / DEMOUNT TOOL

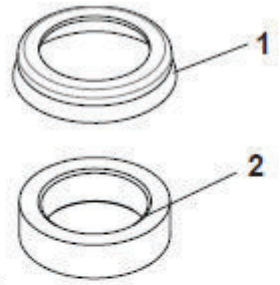

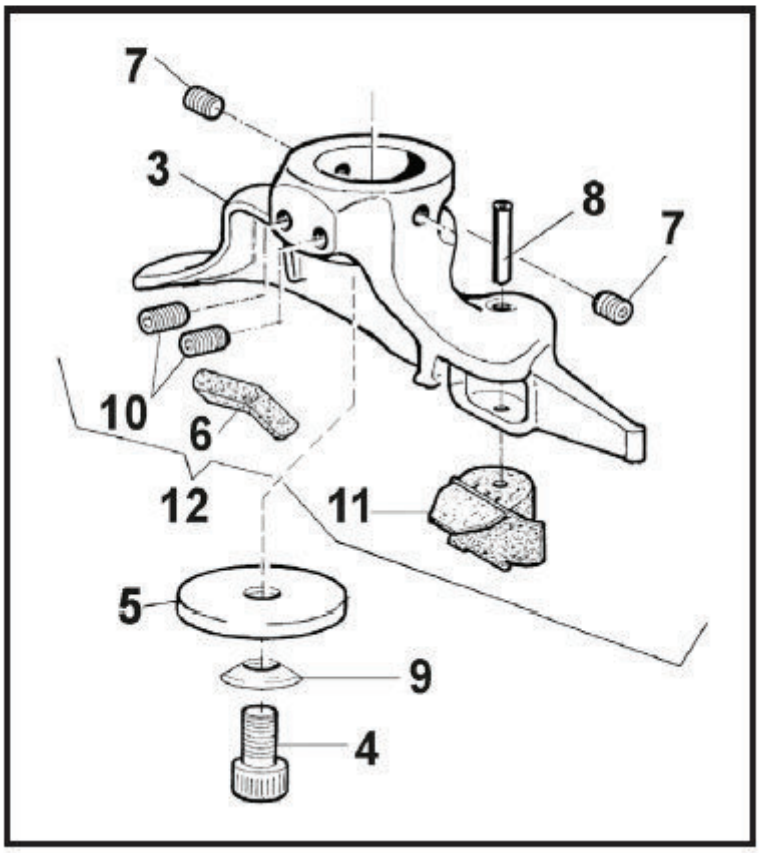

Item No	Part No.	Description
1	83017974	Shk Absorb. Ring Cover
2	83002601	Mounting Tool Shk Absorber
3	83015133	Mounting Tool
4	84399228	Screw 10x25
5	84395804	Washer 14,2x35x5
6	83013650	Plastic Lower Insert
7	84398179	Conical Screw 12x12 5927
8	83009018	Special Pin d.5 m6 l=24
9	84395805	Washer "c" 10,2x21x4
10	84392197	Conical Screw 12x18 5927
11	83006689	Plastic Insert
12	82014250	Mounting Tool

TABLETOP

GT Version

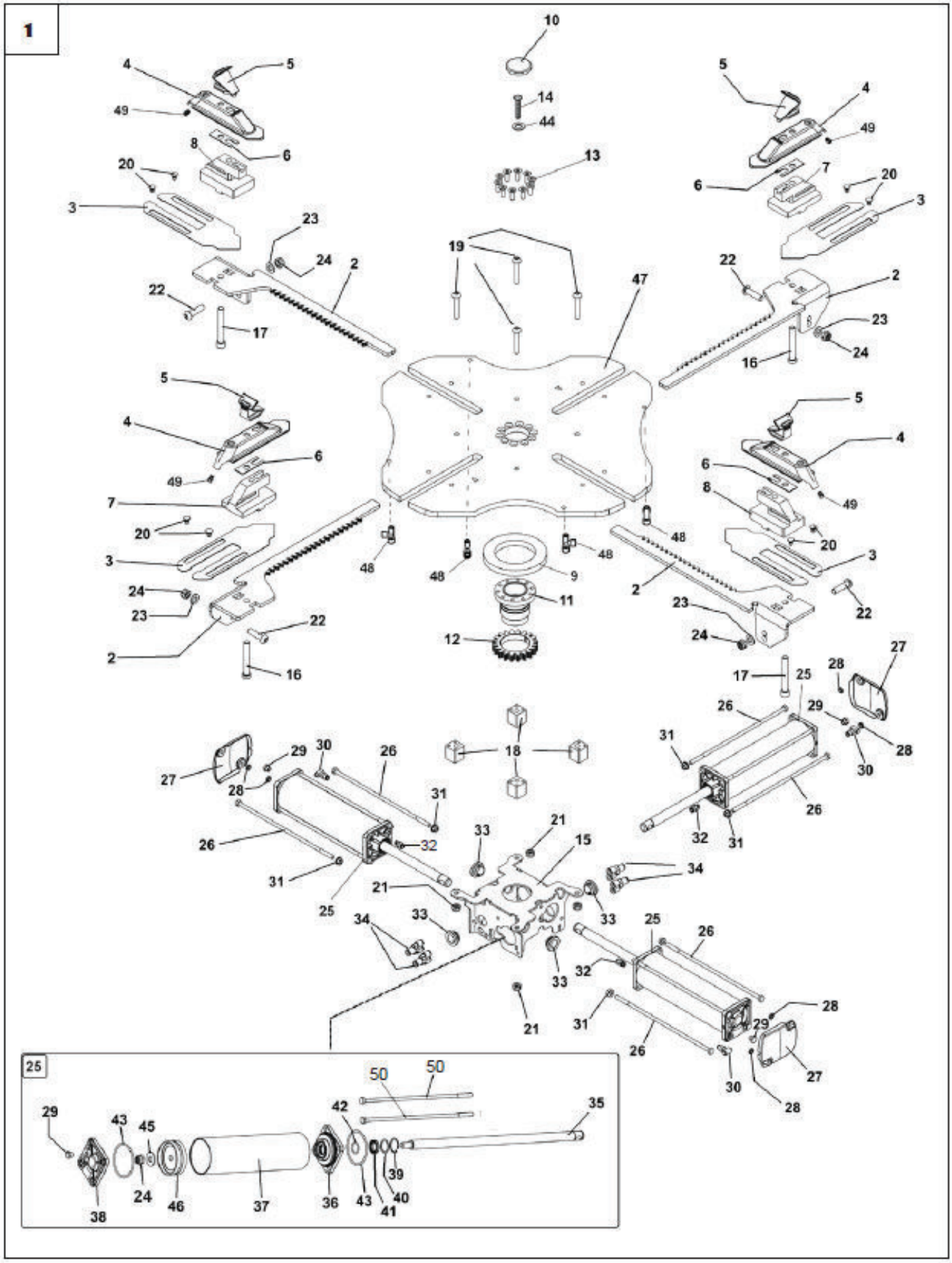

TABLETOP

Item No	Part No.	Description
1	82045125N	Turntable
2	83043821	Rack
3	83043822	Slide Protection Plate
4	82112474	GT Slide
5	83012475	Locking Clamp
6	83042244	Slide Shim
7	83015220	Slide Block h=62
8	83015221	Slide Block h=69,5
9	83042240	Gear Shim - Nylon
10	83000062	Protection
11	83042666	Threaded Hub +15
12	82143108	Gear
13	84399391	Screw 8x25
14	84395179	Screw 16x1,5x45
15	82142219	Cylinders Box
16	84392072B	Screw 12x90 12.9
17	84392073B	Screw M12x85
18	83015222	Spacer
19	84395234	Screw 10x60
20	83015269	Guide Pin
21	84399971	Self-Locking Nut M10
22	84395448	Screw 12x45
23	84399981	Washer 13x24x2,5
24	84399865	Self-Locking Nut M12
25	82043823	Cylinder 27″
26	83043826	Special Screw M8x1.25x305
27	87041264	Cylinder Top End Caps Protective Cover – Black
28	83042332	Protective Cover Bush
29	84199161	Plug 1/8″
30	84194004	Union (90°)
31	84397678	Flanged Nut m8
32	84198993	Quick Union 1/8″
33	83014437	Bushing
34	84197082	Y-Union
35	83043825	Cylinder Rod
36	83015024	Cylinder Top End Cap
37	83043824	Cylinder Liner
38	83019467	Back Flange
39	83199599	Seeger Ring d.30
40	84398146	Steel Shim 24x30x1
41	83199601	Scraper Ring
42	84299168	O-Ring 20,29x2,62
43	84298822	O-Ring d.68,26x3,53
44	84399828	Washer 16 (17x30x3)
45	84398753	Washer 12,5x30x3
46	84198856	Piston d.75
47	83045124	Turntable
48	84197207	Union Tee 1/8″ 10-8
49	84198035	Union 1/4″
50	83043484	Special Screw m8 x 300
51	82004804	Cylinder Gasket Kit d.75

MOTOR & TRANSMISSION

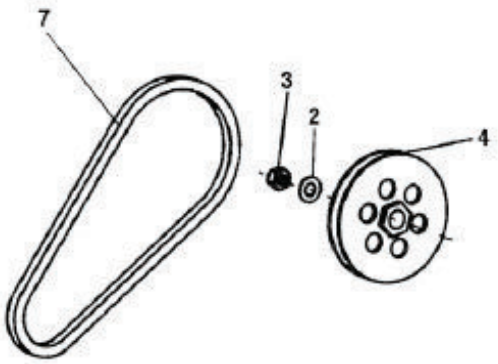

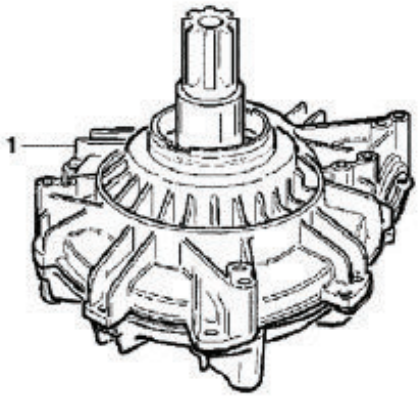

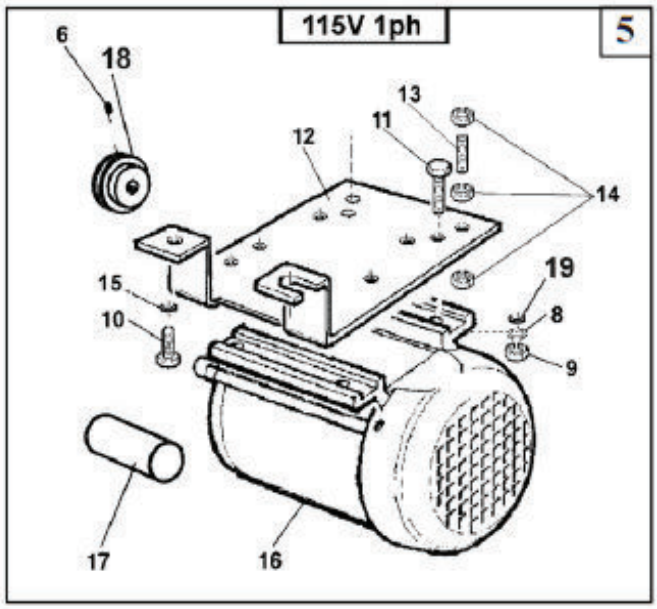

Item No	Part No.	Description
1	82011967	Transmission
2	84398807	Washer 14 (15x28x2,5)
3	84396941	Nut M14
4	83199596	Pulley Gearbox
5	82019189	115V-1PH-60Hz Motor Assy
6	84396218	Screw 6x10
7	84299923	V-Belt A23
8	84399863	Washer 8 (9x24x2)
9	84399900	Self-Locking Nut M8
10	84399228	Screw 10x25
11	84399946	Screw Te M8x16 - 8.8
12	83019003	Motor Support
13	84397964	Screw 10x80
14	84399967	Nut M10
15	84398662	Grower Washer D.10
16	84596185	Motor 2 Hp 115v 1ph
17	84593948	Motor Capacitor (Only)
18	82100166	Motor Pulley
19	83000181	Washer

INFLATION PEDAL ASSY

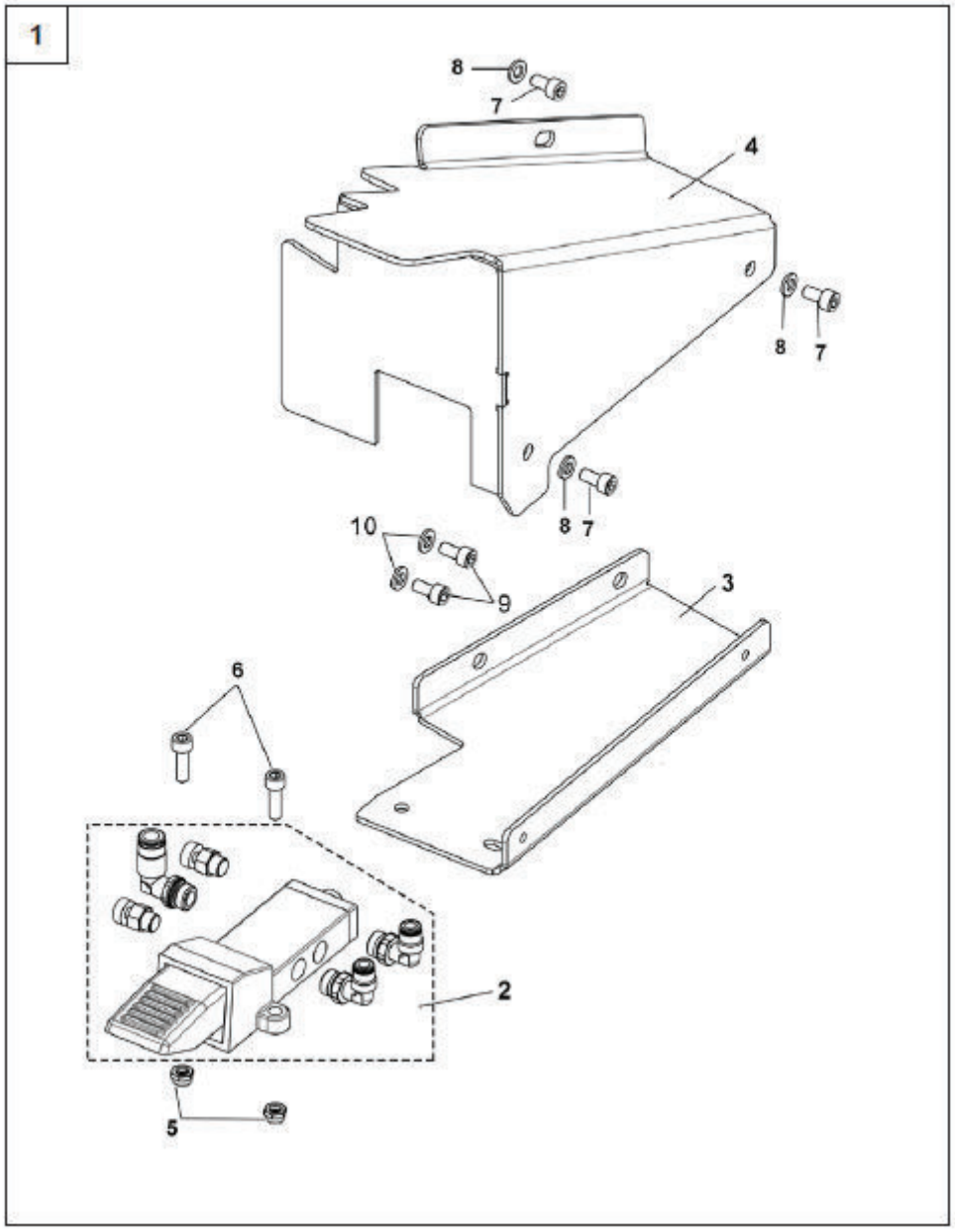

Item No	Part No.	Description
1	82043710	Additional B/L Control Pedal
2	82037050	B/L Pedal Assembly
3	86643401	Support Plate
4	86643398	Pedal Cover
5	84399889	Nut M6
6	84399999	Screw 6x25
7	84399300	Screw 6x12
8	84399998	Washer 6 (6,4x12x1,6)
9	84399298	Screw 8x16
10	84399829	Washer 8 (8,4x16x1,5)

INFLATION GROUP

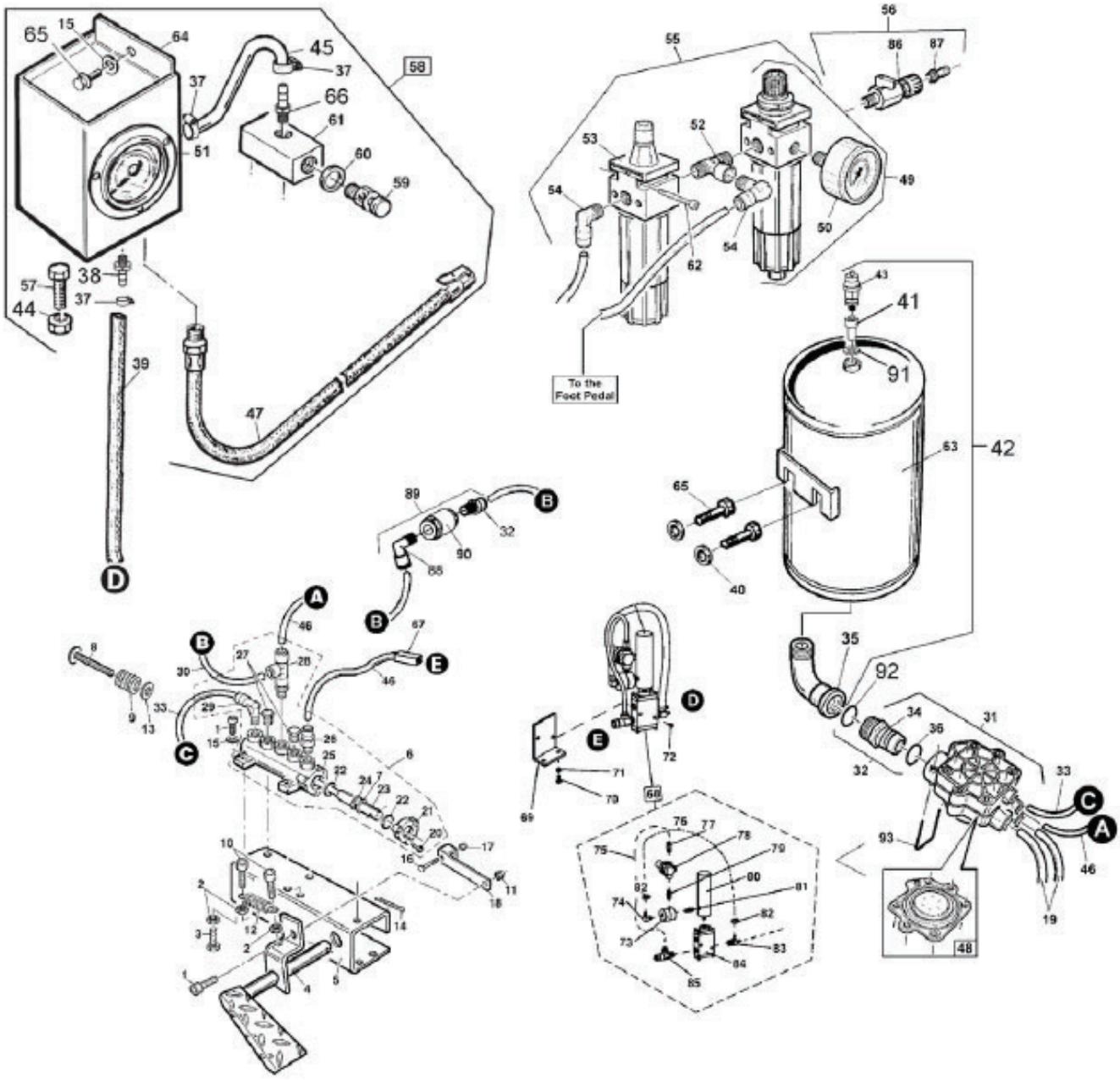

INFLATION GROUP

Item No	Part No.	Description
1	84399890	Screw M6x20 - 8.8
2	84399889	Nut M6
3	84399892	Screw M6x20 - 8.8
4	82110288	Pedal Gt
5	83010287	Pedal Support Gt
6	82009718	Valve Unit
7	84398634	Seeger ring D.10
8	84399229	Screw 6x10
9	84298942	Spring D.20x26
10	84399999	Screw M6x25 - 8.8
11	84399893	Nut Self-Locking M6
12	83000141	Spring
13	84398807	Washer 14 (15x28x2,5)
14	84399100	Split Pin D.3,2x30
15	84399998	Washer 6 (6,4x12x1,6)
16	84399897	Screw M14x25 - 8.8
17	84399895	Nut Self-Locking M4
18	83001853	Valve Control Lever
19	83002109	Hose Rilsan D.14x11
20	84398999	Screw Self-Tapping 3,5x13
21	83001585	Flange For Velve 3001583
22	84299000	O-Ring 9,8x3,85
23	83001849	Gt Pneumatic Valve Shaft
24	83001584	Spacer For Valve 3001583
25	83001583	Valve Distribution
26	84198954	Quick Union 6510 1/8" - 8
27	84199161	Plug
28	84199888	T-Union
29	84199098	Quick Union 1/8" 6-4
30	83010062	Hose Rilsan D.8x6 L=1300
31	82017491	Valve Pneumatic 1"
32	82017906	Quick Union
33	83002110	Hose Rilsan D.6x4 L=580
34	83017573	Quick Union
35	84194765	90° M/F 1" Union
36	84294755	O-ring 2100 D.25,12x1,78
37	84197390	Hose Clamp D.8X13 H9
38	84199026	Union
39	83009093	Hose D.6x12 L=1500
40	84398848	Washer M6 (6,6X11X1,5)
41	84198721	Reducer Piece 1" M 1/4" F
42	2019192A	Air Tank
43	4198703A	Relief Valve - 1/4 NPT
44	84399976	Nut M8
45	83009092	Hose 6x12
46	83099336	Hose Rilsan 8x6
47	82009045	Hose Gt Control Unit
48	82017495	Valve Diaphrgm
49	84196480	Filter
50	84198071	Pressure Gauge
51	84197428	Pressure Gauge 60PSI
52	84198973	Union 1/4"
53	84196481	Lubricator
54	84198883	Quick Union 1/4"
55	82012307	Lubricator+Filter Regulator
56	82012960	Air Intake Unit
57	84399946	Screw 8x16
58	82008892	Pneumatic Unit
59	84299354	Pushbutton Relief
60	84399256	Washer 1/4"
61	83002353	Distribution Frame
62	84396593	Screw 4x40
63	86645462	TANK Lt.20 Bar11 D.241
64	86608895	GT Unit Box
65	84398723	Screw M6x12
66	84198766	CONNECTION 1/8"
67	84197408	Union, Manifold
68	88111186	Pressure Limiter Assembly
69	83008992	Pressure Regulator Bracket
70	84399300	Screw M6 x 12 8.8
71	84399998	Washer M6 (6,4 x 12 x 1,6)
72	84399299	Screw 6 x 30 8.8
73	88109468	Pressure Repeater
74	88110497	Fitting-90 Deg. Male Elbow
75	88182038	Nylon Tube 1/4" OD x 10" Lg.
76	88103649	Ø1/4" x 12" Hose
77	88182035	Male St Fit. 1/8 NPT x 1/4 Tube G
78	88111083	Regulator
79	88109472	1/8" Inline Filter
80	88110496	Volumn Chamber
81	88109471	1/8" Brass Hex Nipple
82	88101428	Hose Clamp-1/4 ID Hose
83	88110325	1/4" NPT Male Run Tee
84	88109466	Valve-Piloted
85	88111255	Spl Tee=1/4 NPT x 3/8 x 1/4 Tube
86	84196354	Valve 400 1/4" F-F
87	84199987	Connection
88	84198883	Quick Union 6500 1/4" - 8
89	82009509	Unidirectional valve group
90	84198853	Unidirectional valve 1/4"
91	84197938	Aluminum Washer 1"
92	84294322	O-ring 3112 D. 28,24x2,62
93	83017494	U-Fork

LEFT HELPER

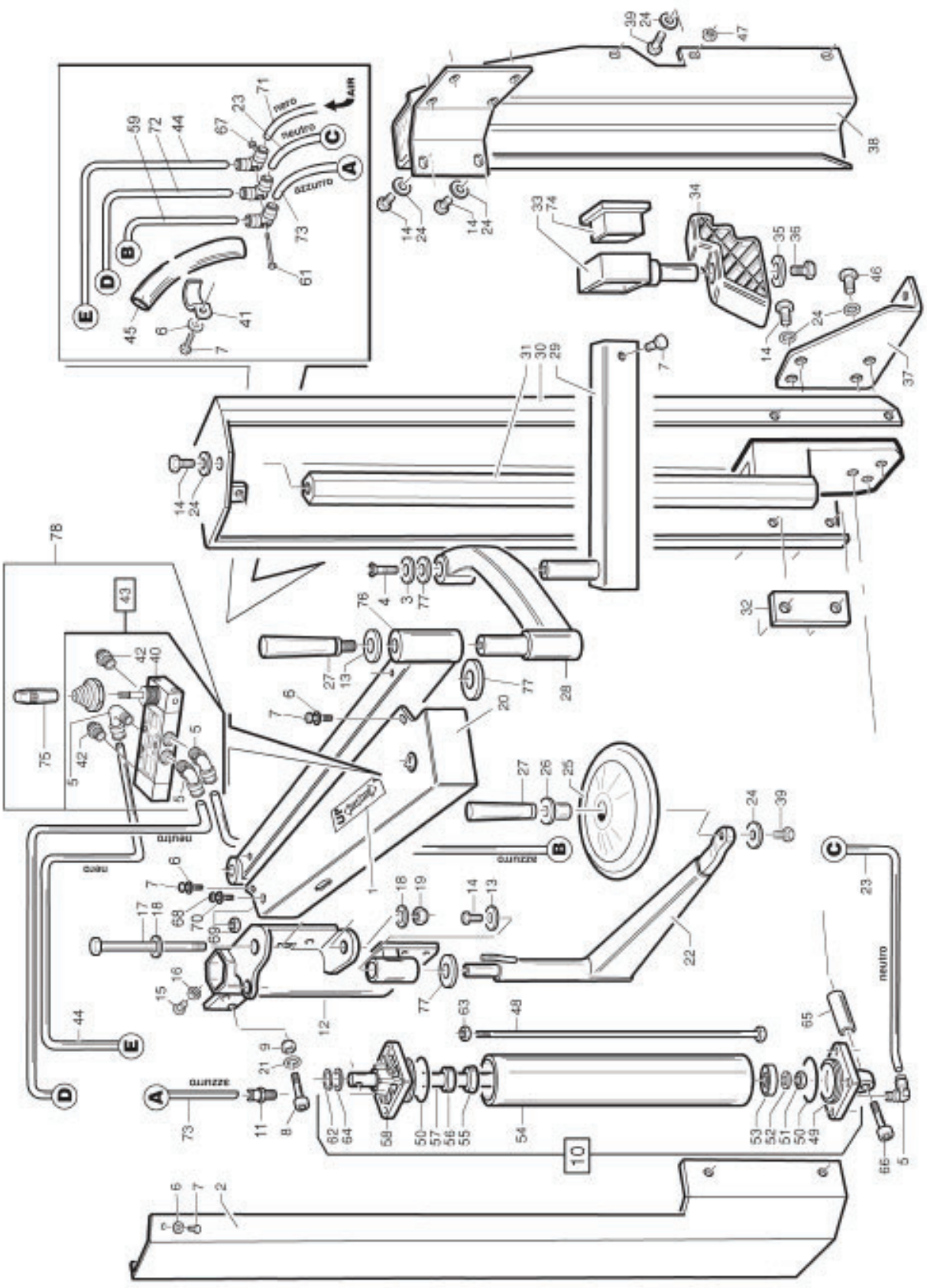

LEFT HELPER

Item No	Part No.	Description
1	83008944	Decal
2	86608820	Arm Cover
3	83009088	Washer
4	84399120	Screw M10
5	84198993	Quick Union 1/8"
6	84399998	Washer
7	84399300	Screw 6x12
8	83000599	Pin M12
9	84399865	Self-Locking Nut M12
10	82008857	Cylinde
11	84198993	Quick Union 1/8"
12	86615932	Slide
13	83002311	Washer
14	84399966	Screw
15	84398901	Brass Screw 10x20
16	84399967	Nut M10
17	84395502	Screw
18	84399828	Washer
19	84399963	Self-Locking Nut M16
20	86615928	Arm Frame
21	84399981	Washer 12 (13x24x2,5)
22	86607545	B/L Disk Arm
23	83015950	Hose 6x4 Neutr.
24	84399378	Washer
25	83006886	B/L Disk
26	83006862	Disk Pin
27	82012683	Handle + Screw
28	86613004	Arm
29	82108983	Arm 3
30	86608819	Bedplate
31	82108818	Vertical Arm
32	83007781	Fixing Plate
33	82115062	Arm Sliding Block
34	83008404	Bead-Press Tool-Nylon-Blk
35	84399863	Washer 8
36	84399298	Screw 8x16
37	86606888	Support
38	86606887	Arm Base Column
39	84399228	Screw 10x25
40	84198285	5-Way Valve
41	84295214	Steel Hook
42	84199610	Silencer 1/8"
43	82006996	Valve -Help & Press Arm
44	83015980	Hose 6x4 black
45	83012448	PVC Sheath
46	84399786	Screw 10x30
47	84399969	Nut M10
48	83008860	Bolt M8
49	83015023	Flange
50	84298822	O-Ring d.68,26x3,53
51	84399865	Self-Locking Nut M12
52	84398753	Washer
53	84198856	Piston
54	83008858	Cylinder Liner l=402
55	83199601	Scraper Ring
56	84298823	Nylon Guide
57	83008859	Cylinder Rod
58	83015024	Flange
59	83015947	Hose 6x4 Lt Blue
60	8180165	Hose 6x4
61	84395146	Screw
62	83199599	Seeger Ring
63	84397678	Flanged Nut M8
64	84398146	Steel Shim
65	83007864	Spacer 12x18x45
66	84398248	Screw 12x75
67	84395145	Self-Locking Nut M3
68	84396635	Screw 10x20
69	84399967	Nut M10
70	84399378	Washer
71	83015952	Hose 6x4
72	83015979	Hose 6x4 Neutr.
73	83015949	Hose 6x4 L.Blue
74	83013112	Arm End Part
75	83010284	Knob
76	87009589	Arm 1
77	84395462	Comp Ring

RIGHT HELPER

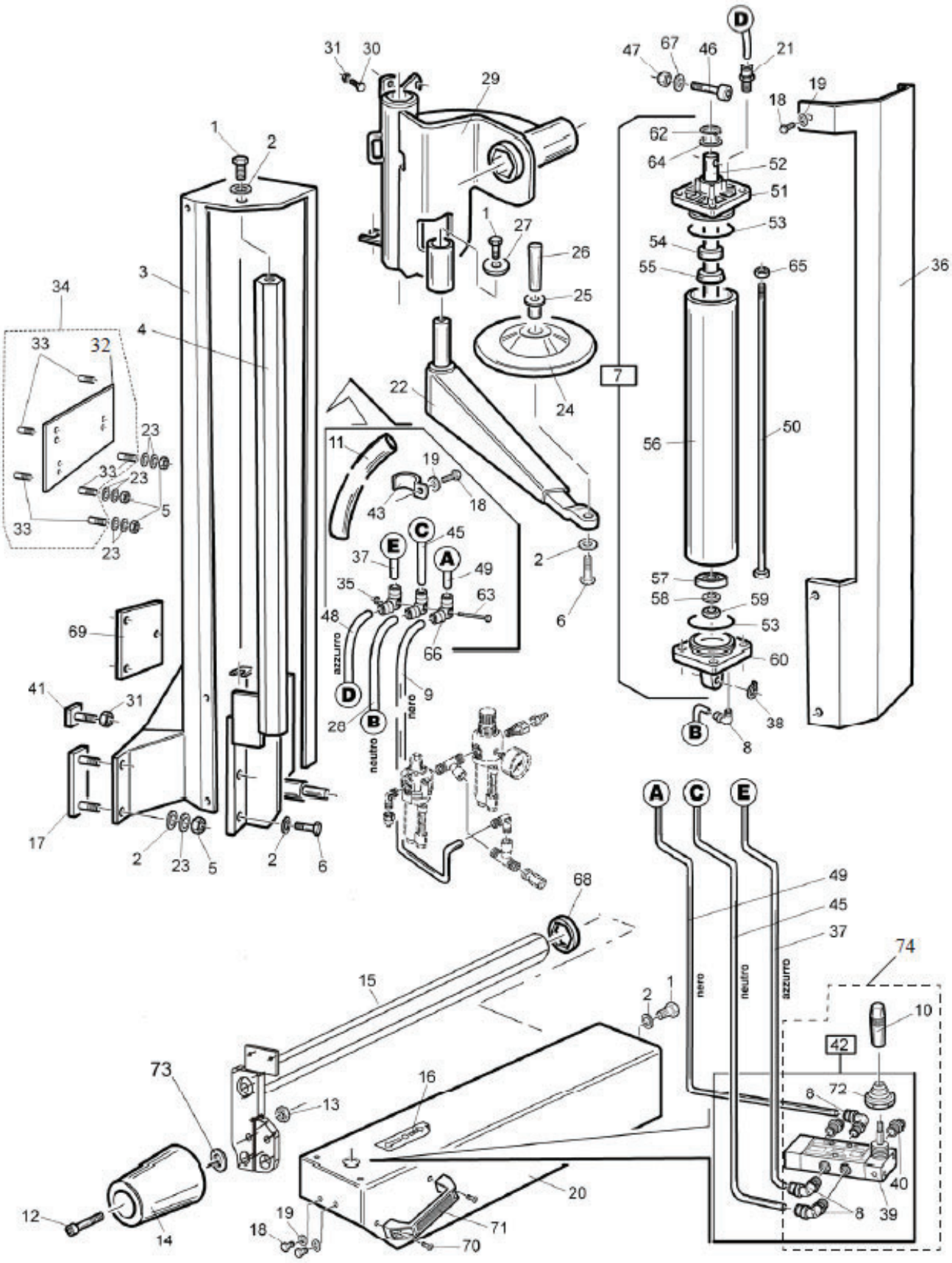

RIGHT HELPER

Item No	Part No.	Description
1	84399966	Screw 10x20
2	84399378	Washer
3	82108816	Bedplate
4	82108815	Vertical Arm
5	84399969	Nut M10
6	84399786	Screw 10x30
7	82008332	Cylinder
8	84198618	Union 1/8"
9	83015952	Hose 6x4
10	83010284	Knob M5
11	83009505	PVC Sheath 18x20 l=860
12	84397454	Screw 20x90
13	84399810	Nut M20
14	83008433	Roller
15	86636406	Horz. Arm - black
16	83008944	Decal
17	82108782	U bolt
18	84398723	Screw 6x12
19	84399998	Washer 6
20	82106853	Arm Cover
21	84198993	Quick Union 1/8"
22	86607546	B/L Disk Arm
23	84398662	Grower Washer d.10
24	83006886	B/L Disk
25	83006862	Disk Pin
26	82012683	Handle + Screw
27	83002311	Washer
28	83015945	Hose 6x4 - neutral
29	86615666	Slide for help 4 - Black
30	84398901	Brass Screw 10x20
31	83006641	Small Plate
32	86643377	Plate
33	84398284	Screw 10x30
34	82043457	Plate
35	84395145	Self-Locking Nut M3
36	82108817	Arm Cover
37	83015948	Hose 6x4 – L.Blue
38	84399864	Seeger Ring
39	84198285	5-Way Valve
40	84199610	Silencer 1/8"
41	82108784	Anti-Rotation Screw
42	82006996	Valve - help & press arm
43	84295214	Steel Hook
44	83014451	Hose 6x4
45	83016150	Hose 6x4 - Neutral
46	83000599	Pin m12
47	84399865	Self-Locking Nut M12
48	83015949	Hose 6x4 L.Blue
49	8180165	Hose 6x4
50	83008334	Bolt M8x1
51	83015024	Flange
52	83006649	Cylinder Rod
53	84298822	O-Ring
54	84299168	O-Ring
55	83199601	Scraper Ring
56	83008333	Cylinder Liner
57	84198856	Piston
58	84398753	Washer
59	84399865	Self-Locking Nut M12
60	83015023	Flange
62	83199599	Seeger Ring
63	84395146	Screw 3x45
64	84398146	Steel Shim
65	84399976	Nut M8
66	84196333	Union
67	84399981	Washer 12
68	83002601	Mounting Tool SHK Absorber
69	83009675	Fixing Plate
70	84297851	Handle
71	84398672	Screw 6x16
72	84297978	Valve Cover
73	84399813	Washer 20
74	82019027	Help/Press Valve Assy & Knob

PNEUMATIC DIAGRAM

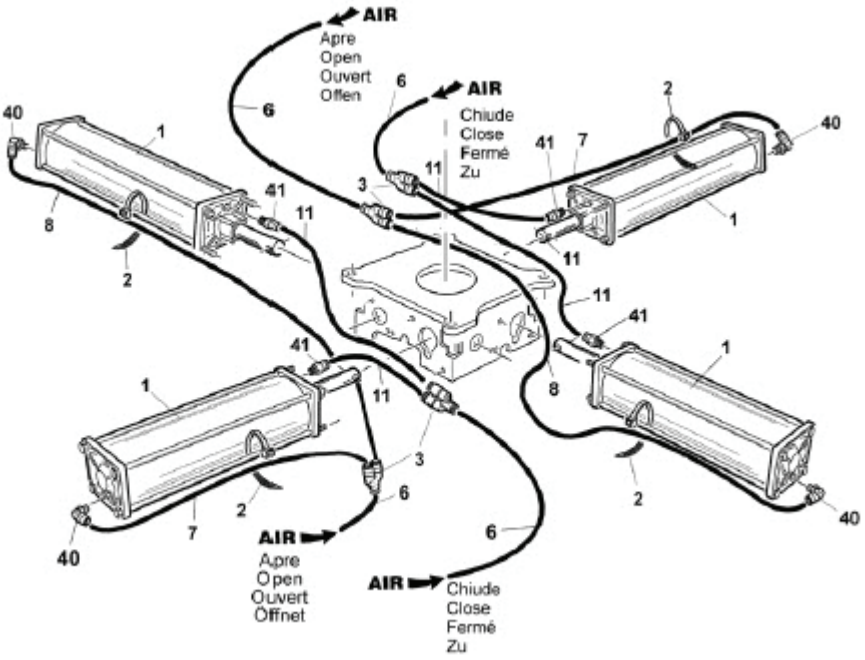

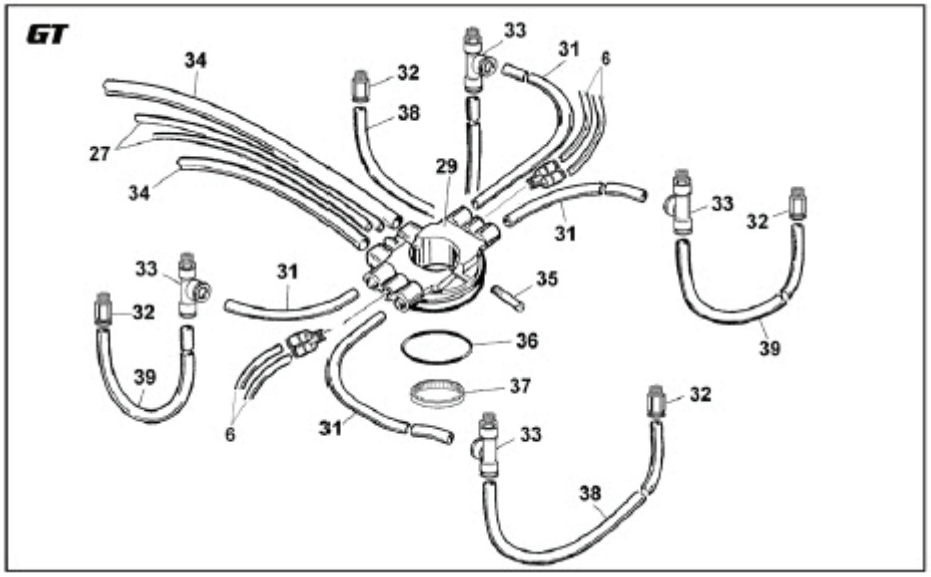

Item No	Part No.	Description
1	82043823	Cylinder Unit
2	84298213	Plastic Strip
3	84197082	Y-Union
6	83001617	Hose 8x6
7	83037061	Hose 6x4 Black
8	83015892	Hose 6x4
11	83001618	Hose 6x4
27	83099335	Hose 8x6
29	84292638	GT Double Rot nion"
31	83006478	Polyurethane Hose
32	84198035	Union 1/4"
33	84197207	Union Tee 1/8" 10-8
34	83002109	Hose 14x11
35	83001996	Screw

Item No	Part No.	Description
36	84297520	O-Ring
37	83008646	O-Ring Spacer
38	83015868	Polyurethane Pipe
39	83015867	Polyurethane Pipe
40	84194004	Union M6 (90°)
41	84198993	Quick Union 1/8"

CYLINDER, BEAD LOOSENER

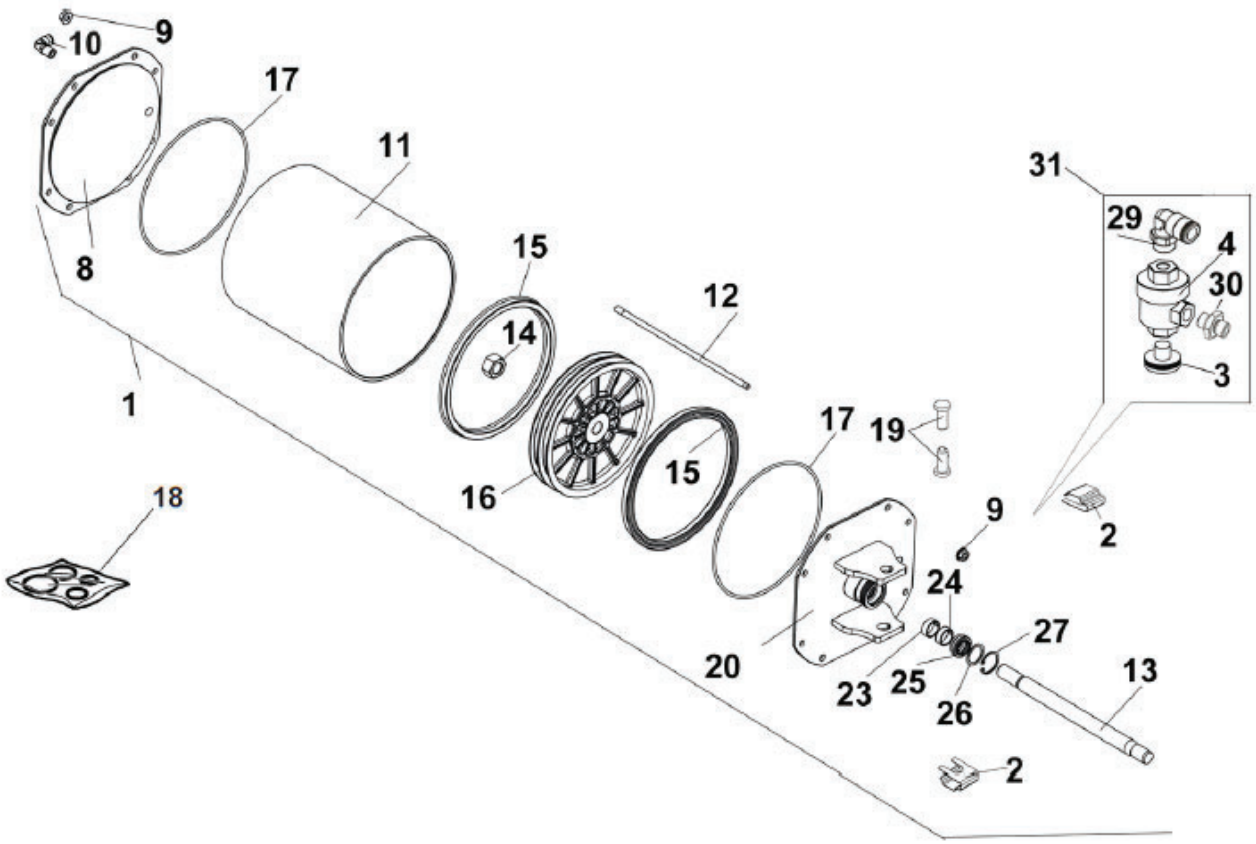

Item No	Part No.	Description
1	82038743	B/L Cylinder
2	83009012	Spring
3	84198808	Silencer 1/4"
4	84199201	Valve
8	83038694	Cylinder Rear Flange
9	84398007	Flanged Nut M6
10	84198883	Quick Union 1/4"
11	83038744	Bead Breaker Cylinder Liner
12	83038746	Threaded Rod M8 x1.25
13	83031738	B/L Cylinder Shaft
14	84394969	Nut M18x1,5
15	84193622	Seal
16	83035724	Cylinder Piston
17	84198145	O-Ring
18	82040304	B/L Cylinder, seal kit
19	83044424	B/L Cylinder Pin
20	82138745	Cylinder Front Flange
23	84298823	Nylon Guide
24	84299168	O-Ring
25	83199601	Scraper Ring
26	84398146	Steel Shim
27	83199599	Seeger Ring
29	84192639	Union 1/4"-8 (90°)
30	84199726	Nipple 1/4"
31	82039162	Quick Relief Valve for Hd Cylinder

ACCESSORIES

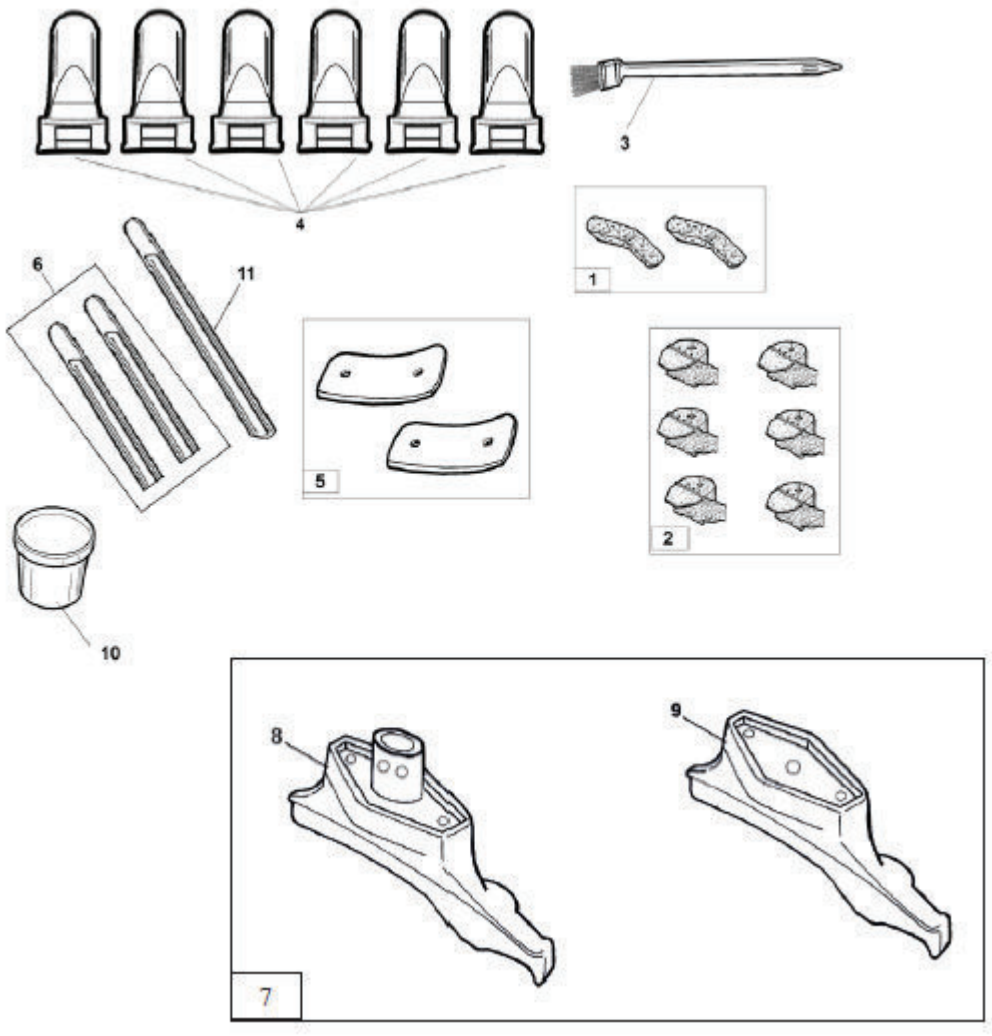

Item No	Part No.	Description
1	89236146	Kit 2 Lower Inserts
2	89209611	Kit 6 Duckhead Plastic protectors
3	84296517	Lube Brush
4	89209612	Kit 6 Clamp Plastic Protectors
5	89219196	Protectors for B/L Shovel
6	89219195	Kit of Bead Lifting Lever Covers
7	89210961	Plastic Mounting Head Kit Complete
8	82008402	Plastic Mounting Tool
9	83008403	Plastic Mounting tool
10	83008610	Tire mounting paste 4kg.
11	83006970	Bead Lifting Lever

Page intentionaly
left blank

85611588 00 7/19
© Copyright 2019 Hennessy Industries and COATS® All Rights Reserved.
Printed in USA